WOLONG

0801WL001235

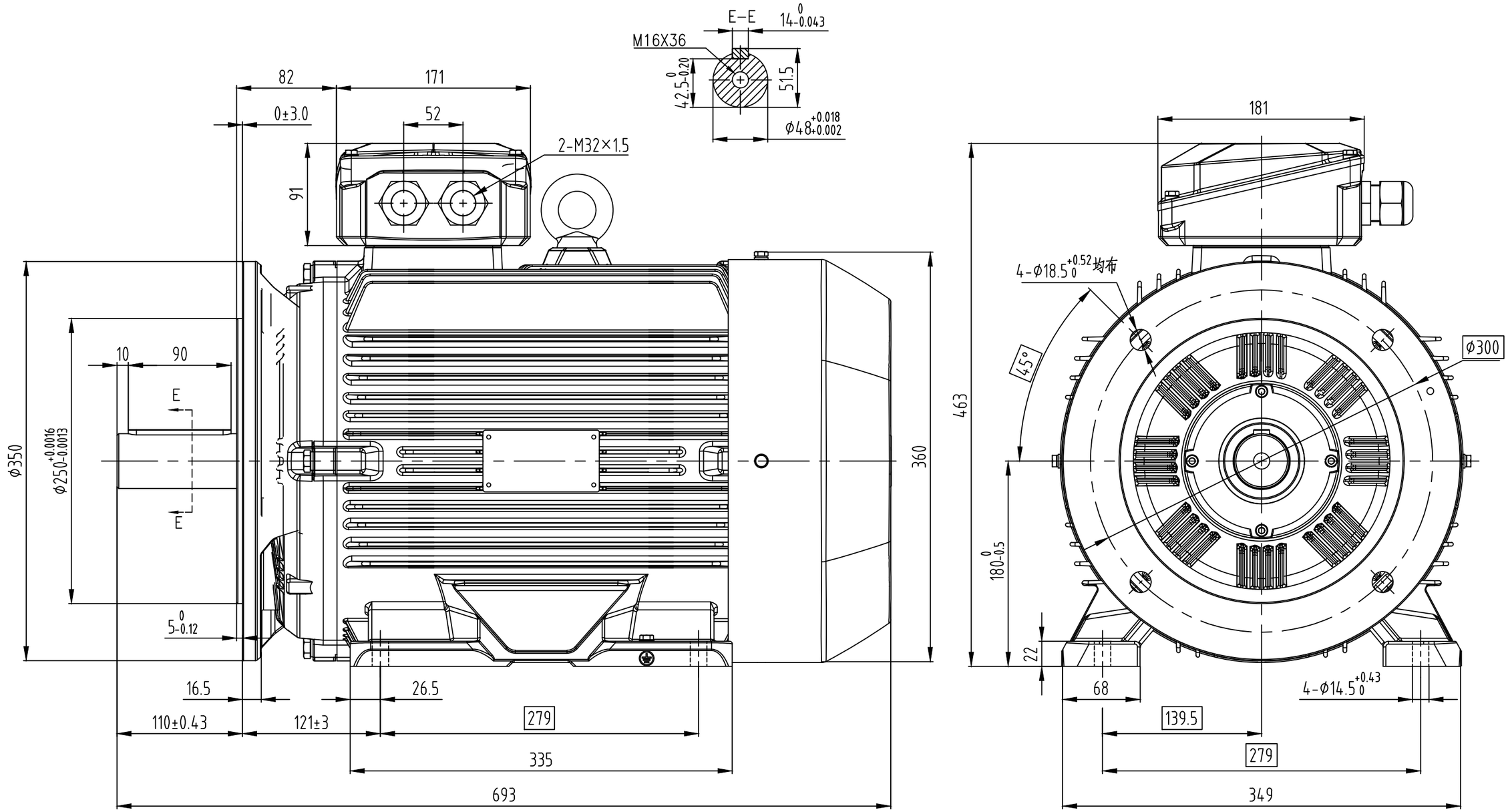

Share(General) parts Register

Design

Check

General No.of original tracing dring

General No.of Tracing dring

sign

Date

NOTES:

1、尺寸单位为毫米。

1.Dimensions are in mm.

换版		2020CD000349	李建树	20200319	WE3-180L B35	0801WL001235
Revision	Place	Nodification file No.	Sign	Date		Version C.2
Design by	李建树	Standardized by				Drawing Mark / Special Mark / WT / scale
Verified by	张枫顺	Examined by				Total: Pages Page
Review by		Approve by	王景辉			Wolong Electric Group Co.,Ltd
Countersignature		Date	2020-03-22			